DATE
19.12.2018

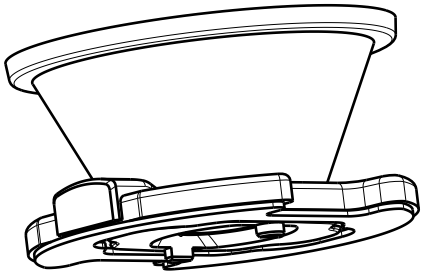

Isometric view

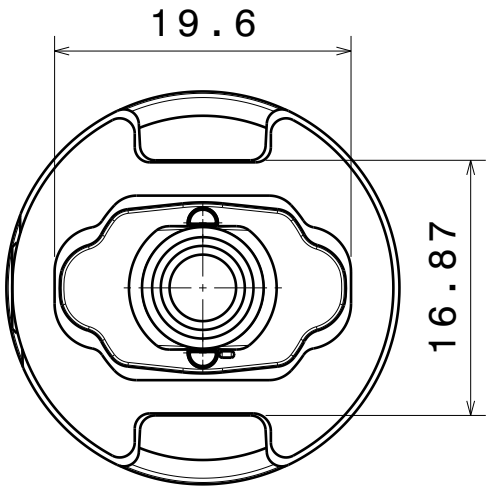

Bottom view

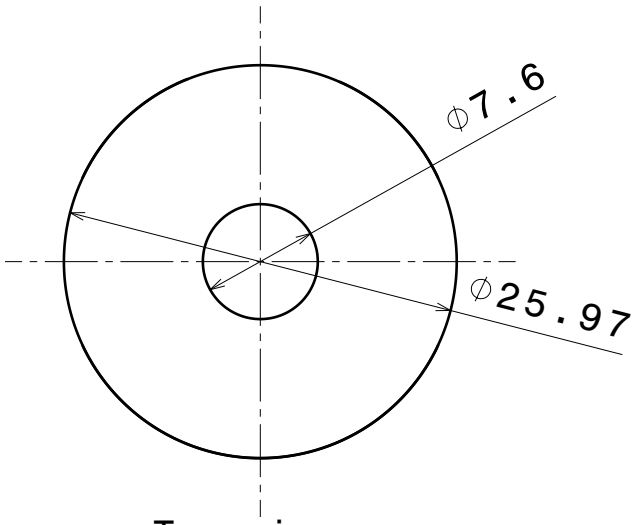

Top view

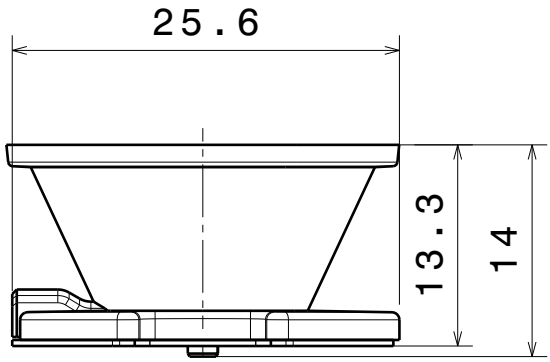

Front view

PART	TYPE	MATERIAL	COLOR / COATING
CA12589_Emily-WWW_mech_			clear

MECHANICAL DRAWING

PRODUCT

EMILY

LEDiL®

Plastic moulding general tolerances according to DIN 16901-130 and applies if not otherwise shown in the drawing. Silicone moulding general tolerances according to ISO 3302-1 Class M3 and applies if not otherwise shown in the drawing.

FIRST ANGLE PROJECTION:

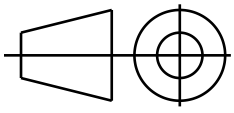

This drawing is the property of LEDiL Oy. It may not be copied or otherwise distributed without prior written permission from LEDiL Oy.

SCALE 2:1 | WEIGHT - | A4 SHEET 1/1