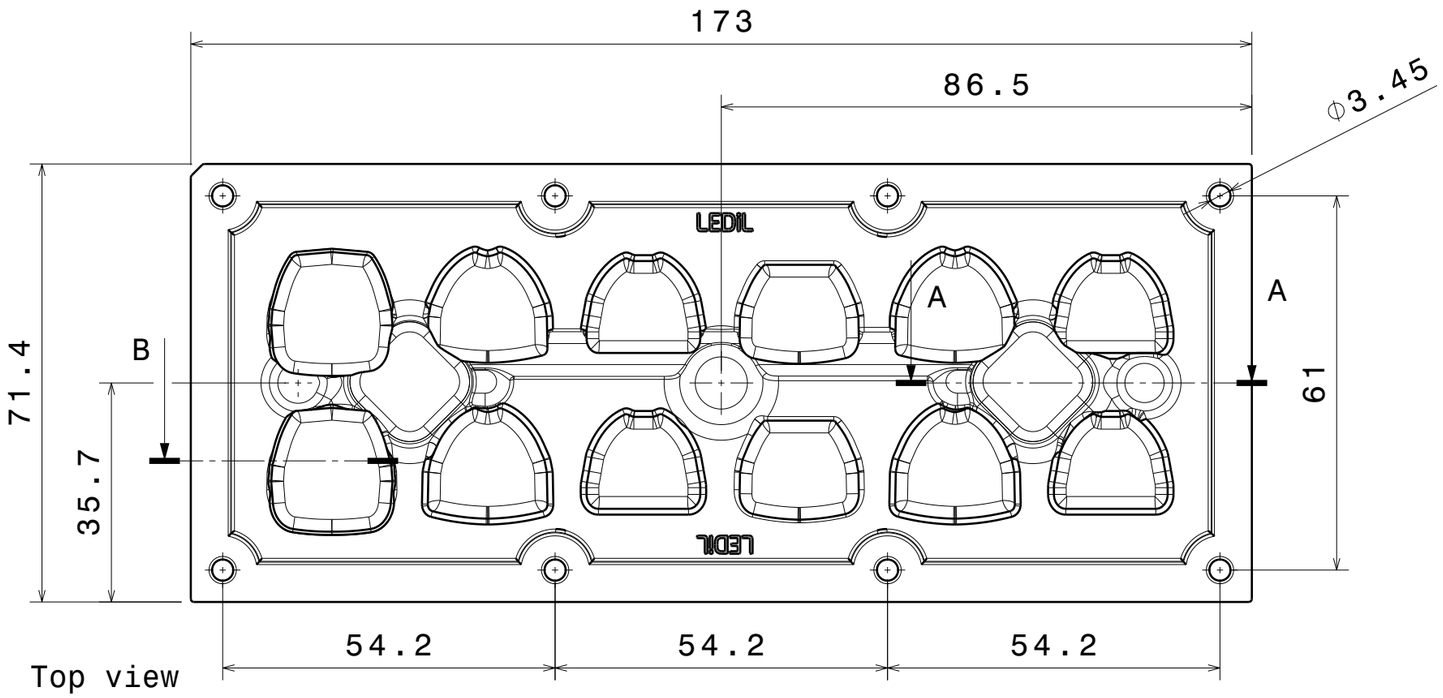

Top view

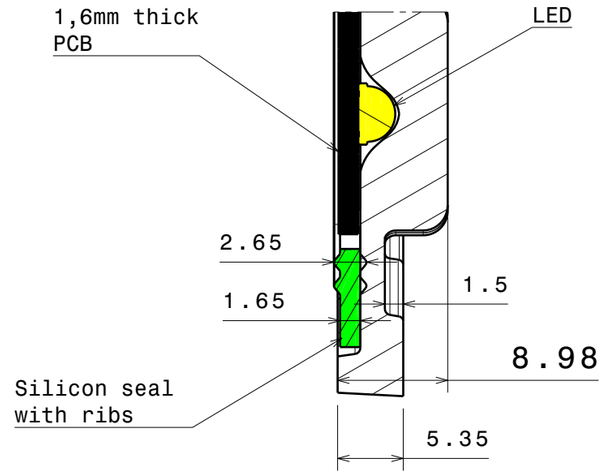

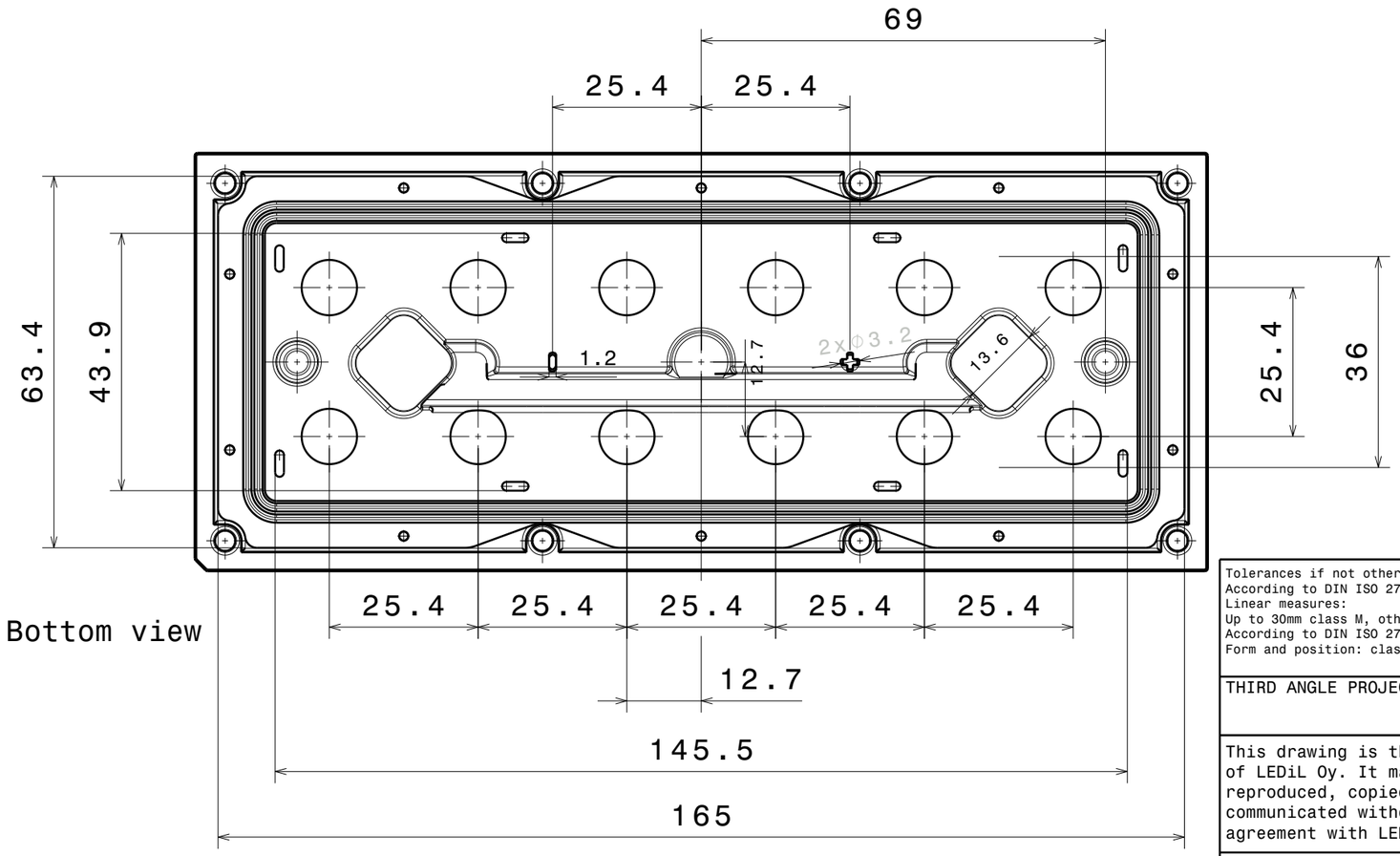

Bottom view

Section view A-A

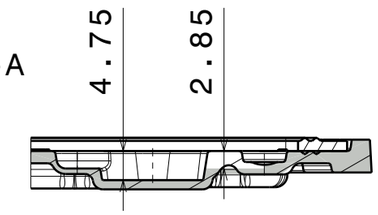

Pockets for wiring and screws

INDEX	PART NO	DESCRIPTION	MATERIAL	COLOUR
1	C14018	2X6-SEAL25	Silicone	white
2	CS15055	STRADA-IP-2X6-DWC-90	PC	clear

Tolerances if not otherwise shown
According to DIN ISO 2768-1
Linear measures:
Up to 30mm class M, otherwise class C.
According to DIN ISO 2768-2
Form and position: class L

THIRD ANGLE PROJECTION:

This drawing is the property of LEDiL Oy. It may not be reproduced, copied or communicated without a written agreement with LEDiL Oy.

Ledil Oy
Salorankatu 10
FIN 24240 SALO
Finland

DRAWING TITLE
CS15055_STRADA-IP-2X6-DWC-90

SIZE A3

PART NUMBER CS15055

SCALE 1:1 | WEIGHT 58,36 g | SHEET 1/1