DATE
20.03.2019

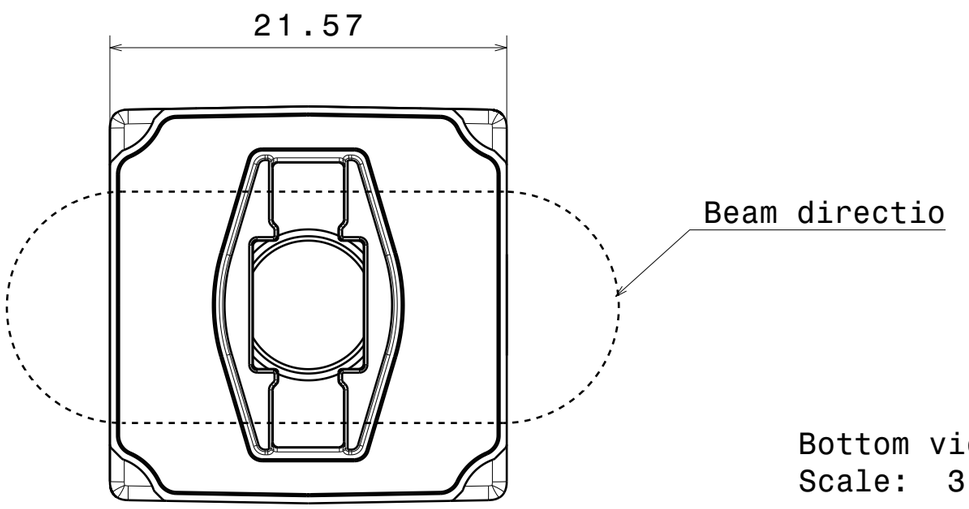

Bottom view
Scale: 3:1

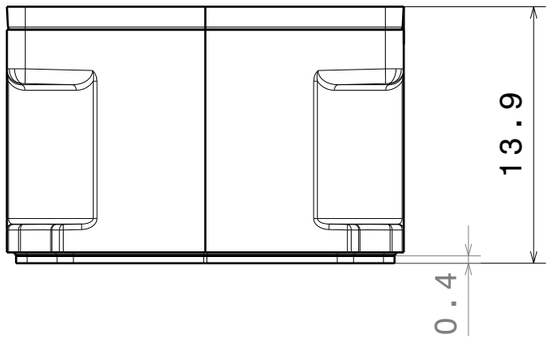

Front view
Scale: 3:1

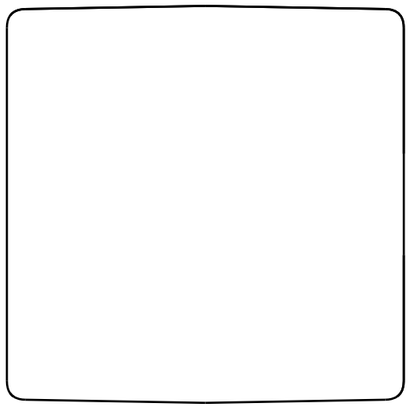

Top view
Scale: 3:1

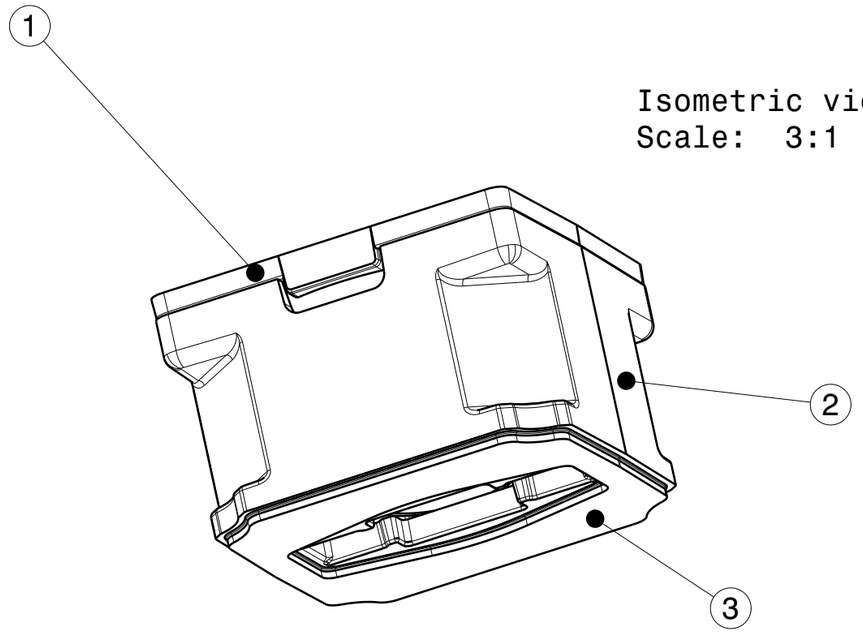

Isometric view
Scale: 3:1

CA10572_OSS-2-0

COMPONENTS

INDEX	PART	TYPE	MATERIAL	COLOR / COATING
1	C10521_ROSE2-0	LENS	PMMA	clear
2	C10346_ROSE-HLD	HOLDER	ABS	white
3	C10278_ROSE-TAPE	TAPE	Tape	

Notes

PCB or heatsink level.
LED location
Ensure LED fitting from a product specific 3D model available from www.ledil.com
For more details about installation please see LEDiL Installation Guide on www.ledil.com

MECHANICAL DRAWING

PRODUCT
ROSE

Plastic moulding general tolerances according to DIN 16901-130 and applies if not otherwise shown in the drawing. Silicone moulding general tolerances according to ISO 3302-1 Class M3 and applies if not otherwise shown in the drawing.

FIRST ANGLE PROJECTION:

LEDiL®

This drawing is the property of LEDiL Oy. It may not be copied or otherwise distributed without prior written permission from LEDiL Oy.

SCALE 3:1 | WEIGHT - | A3 SHEET 1/1